ESSENTIALS AUTHENTIC
Multi-towel rack
MODEL # 40660000

Pure Freude an Wasser

GROHE

Product Description:
ESSENTIALS AUTHENTIC
Multi-towel rack

Standard Specification:
- 24" (600mm)
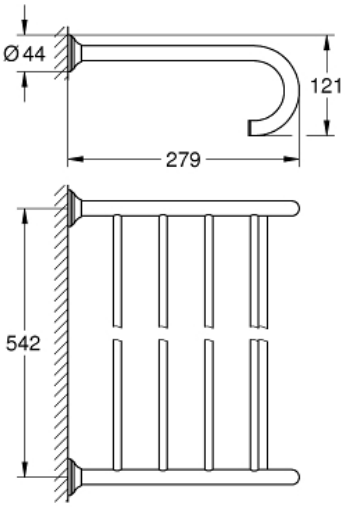
Color:
❑ 40660000 StarLight Chrome