# ESTATE®

## BATH ACCESSORIES
## TOWEL BARS

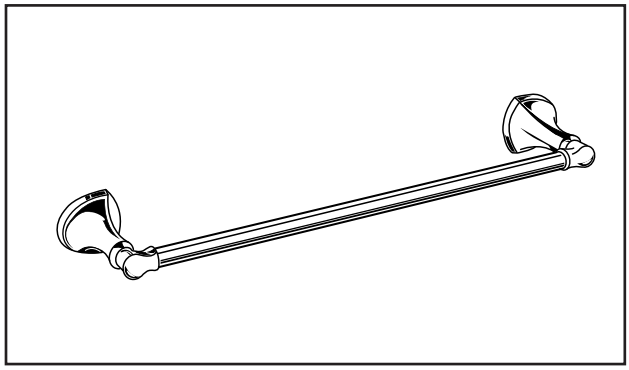

## MODEL NUMBER:

- ❏ **7722018 - 18" Towel Bar**
- ❏ **7722024 - 24" Towel Bar**

### Available Finishes

| | |
|---|---|
| 002 | Polished Chrome |
| 013 | Polished Nickel |
| 278 | Legacy Bronze |
| 295 | Brushed Nickel |
| 243 | Matte Black |

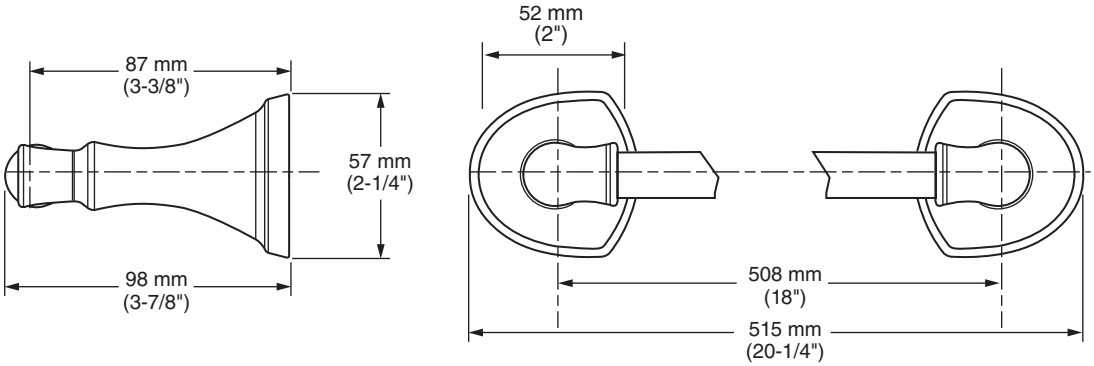


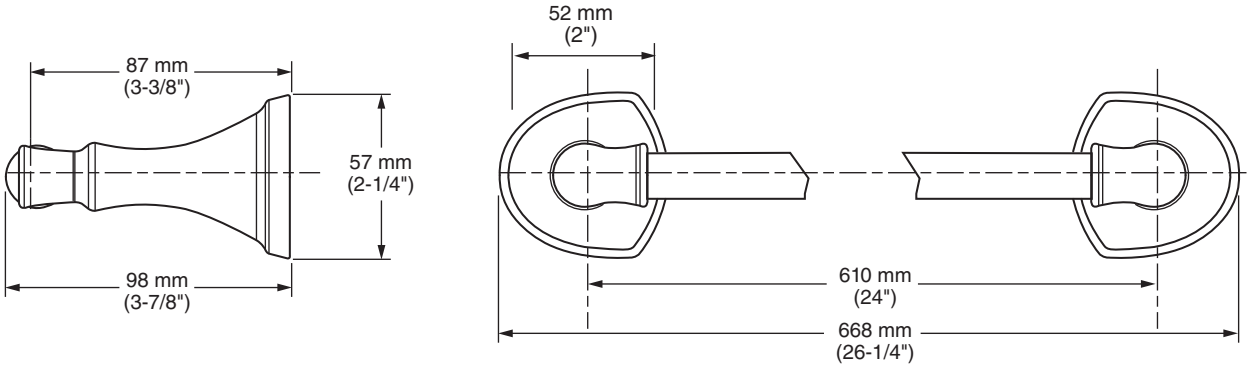


## PRODUCT FEATURES:

**Materials of Construction:** Metal construction for durability & long life. Brass rod.

**Concealed Mounting:** No exposed set screws.

**Easy to Install**

- Coordinates with Estate® Suite of fixtures.

## SUGGESTED SPECIFICATION

18" and 24" Towel Bar shall feature metal construction. Rod shall be brass. Shall feature concealed mounting with no exposed set screws. Towel Bar shall be American Standard Model # 7722___.___.



© 2022 LIXIL Canada Inc.