SPECTRA® HANDHELD
4-FUNCTION HAND SHOWER

MODEL NUMBER:

❏ **9038154 Spectra® 4-Function Hand Shower**

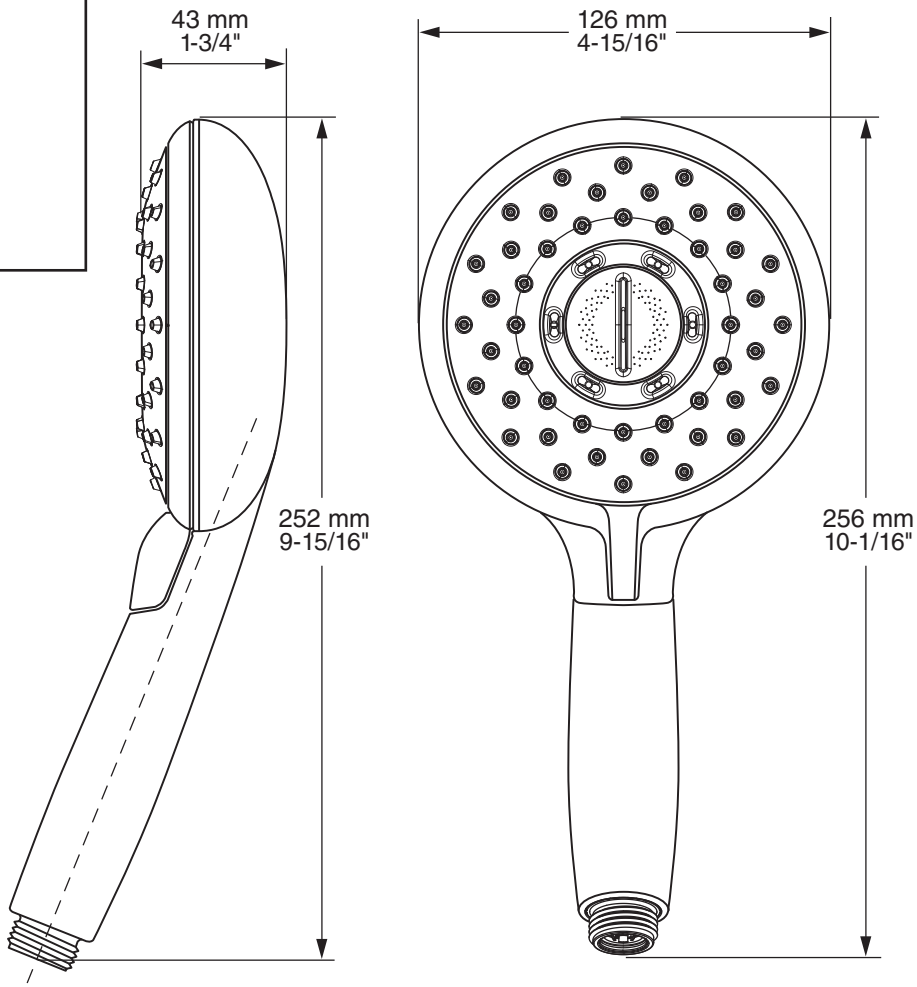

GENERAL DESCRIPTION:

5" (127 mm) Hand shower adjusts from Drench to Sensitive to Powerwash® to Massage. Permanent built-in compensating flow control device. 1.8 gpm/6.8 L/min. maximum flow rate.

PRODUCT FEATURES:

Water Saving: WaterSense certified.

Pressure Compensating Flow Control Device: Provides consistent flow over a wide pressure range.

Variety of Spray Functions: Allows the user to select the spray functions best suited to their needs.

SUGGESTED SPECIFICATION

Hand shower shall have 4 spray functions. Hand shower shall have a pressure compensating flow control device. Hand shower shall include check valve to prevent cross flow of hot and cold water. Fitting shall be American Standard Model # 9038154.___.

© 2022 LIXIL Canada Inc.

SPECTRA+ HANDHELD™
4-FUNCTION HAND SHOWER

CODES AND STANDARDS

These products meet or exceed the following codes and standards:

ASME A112.18.1
CSA B125.1
EPA WaterSense

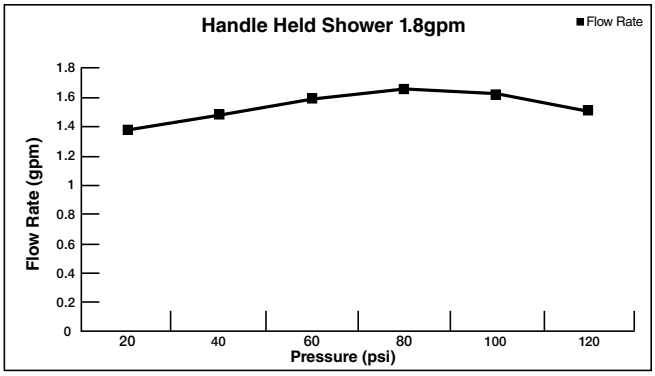

Product Number	Description	Finish Options				
		Polished Chrome	Brushed Nickel	Polished Nickel	Legacy Bronze	Matte Black
		002	295	013	278	243
9038154	Spectra® 4-Function Hand Shower. 1.8 gpm Max Flow.					

Hand Shower Accessories		
Product Number	**Description**	
8888035	59" Metal Shower Hose	
8888053	79" Metal Shower Hose *(Chrome Only)*	
1660400	Vacuum Breaker	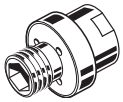
8888096	Shower Arm Bracket	
8888036	Fixed Wall Bracket	

Hand Shower Accessories		
Product Number	**Description**	
8888037	Wall Supply	
8888068	Round Wall Supply	
8888069	Square Wall Supply	
8888038	Wall Supply Bracket	

PART OF LIXIL

© 2022 LIXIL Canada Inc.