MINIMALIST™ SLOW-CLOSE QUICK RELEASE TOILET SEAT

MINIMALIST™ SLOW-CLOSE QUICK RELEASE TOILET SEAT

❑ **5305A.05CH** Elongated toilet seat

- Top mount seat installation
- Slow-Close hinges to prevent slamming of the seat
- Quick release for easy removal and cleaning
- Fits any conventional elongated toilet
- EverClean® silver-based surface permanently inhibits the growth of stain and odor causing bacteria, mold and mildew on the surface. EverClean® surface does not protect against disease causing bacteria.

SHOWN: CONVENIENT SLOW-CLOSE FEATURE

To Be Specified
❑ Colour:
❑ White

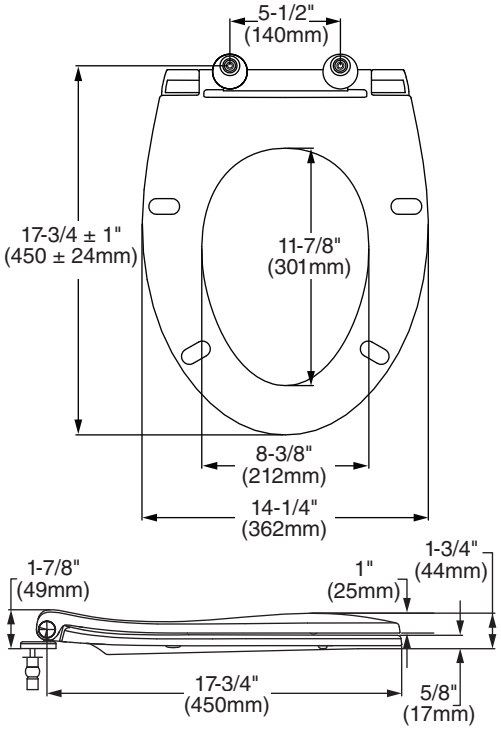

5305A.05CH ELONGATED TOILET SEAT

EVERCLEAN®

© 2015 AS America Inc.